11075813

INDEX

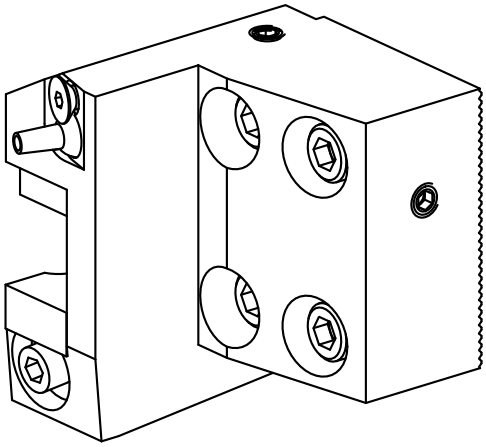

11075813
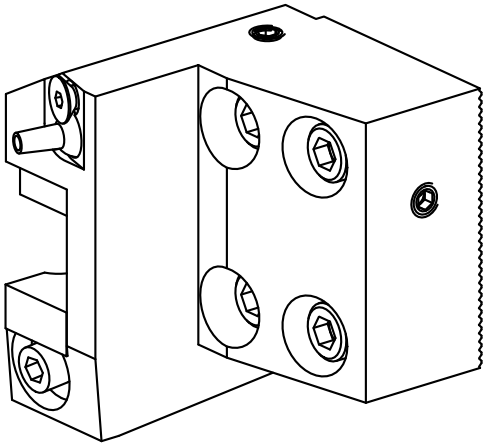
INDEX