10887763

INDEX

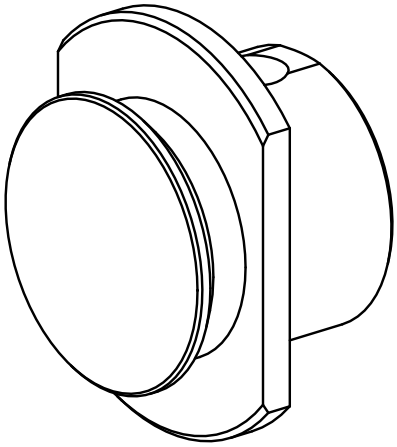

10887763
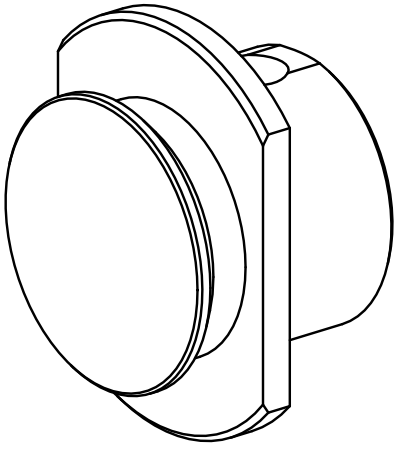
INDEX