10219251

INDEX

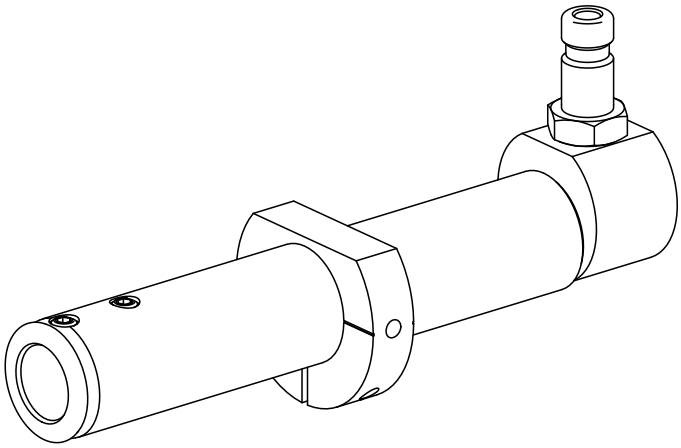

10219251
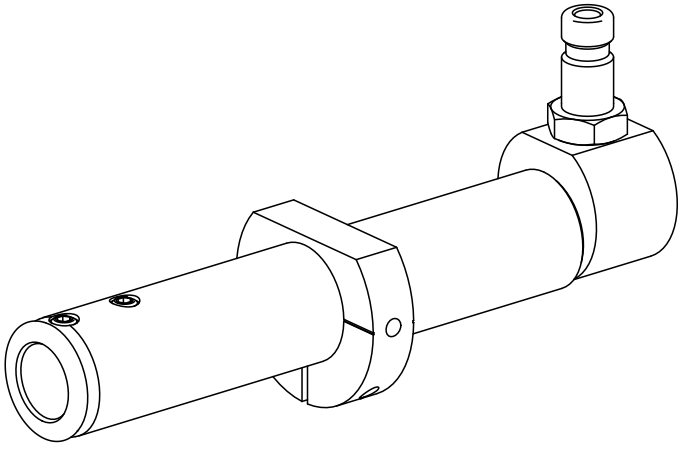
INDEX