12123042

INDEX

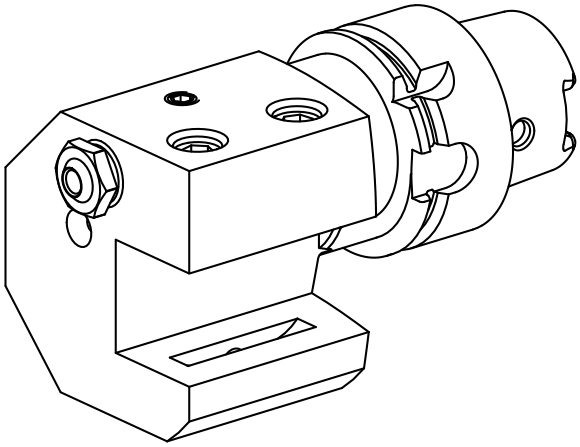

HSK 40

12123042

INDEX

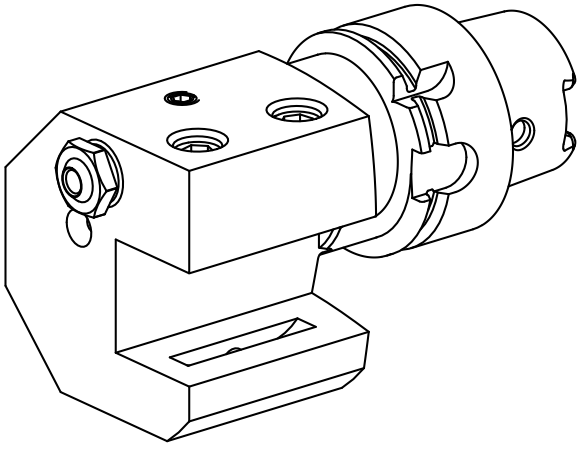

HSK 40