12089325

INDEX

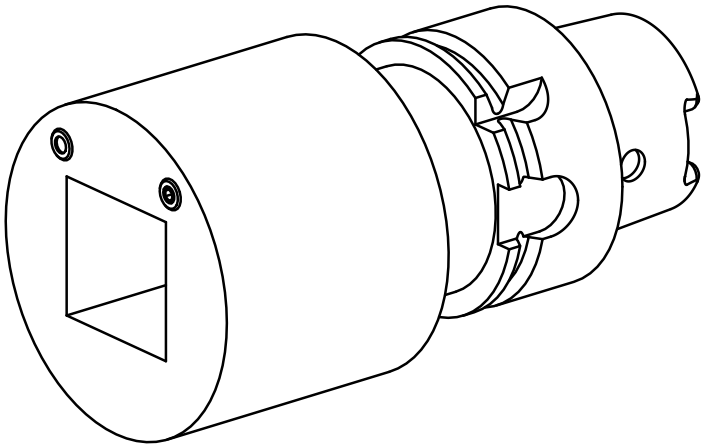

HSK 40

12089325

INDEX

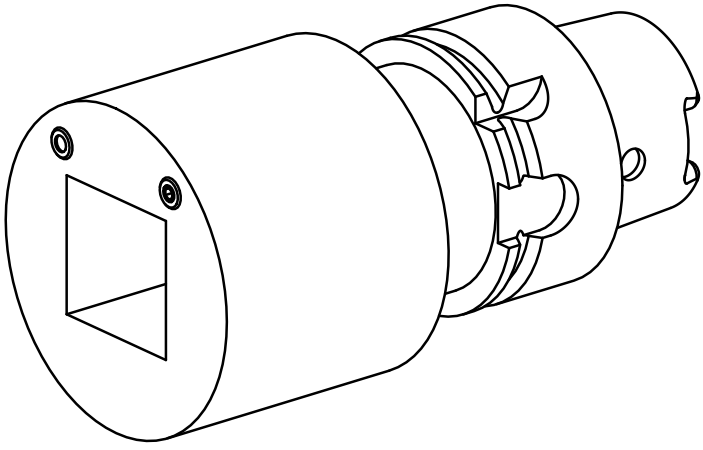

HSK 40