10084039

INDEX

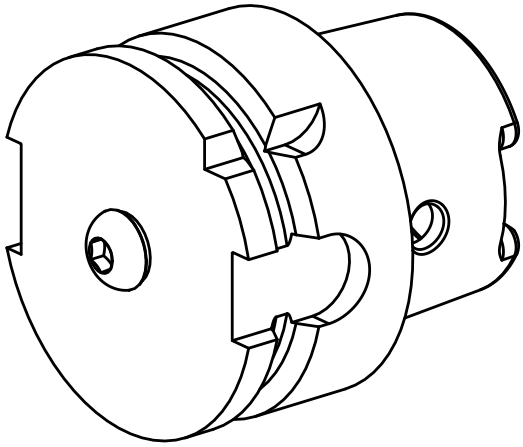

HSK 50

10084039

INDEX

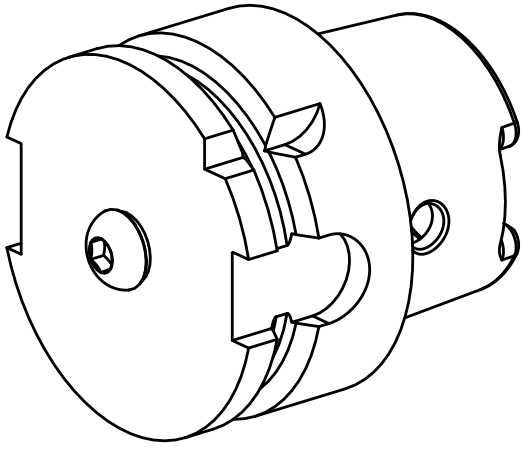

HSK 50