10623589

INDEX

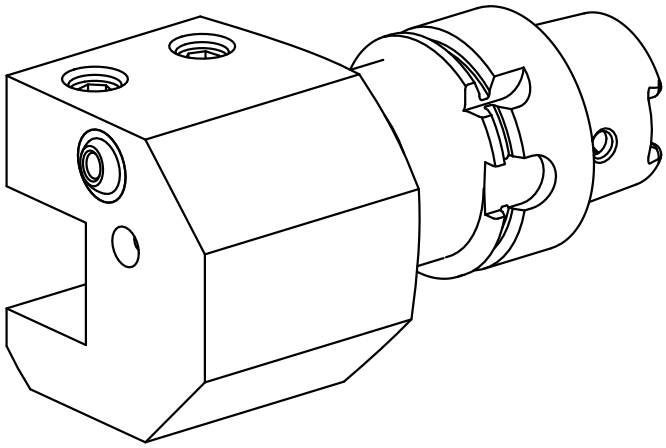

HSK 40

10623589

INDEX

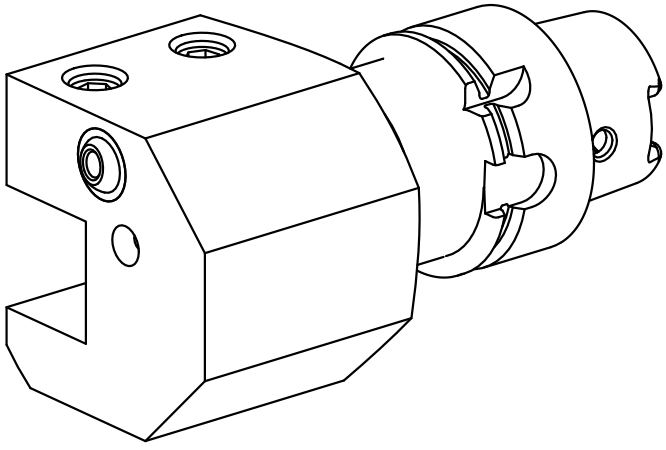

HSK 40