11096656

INDEX

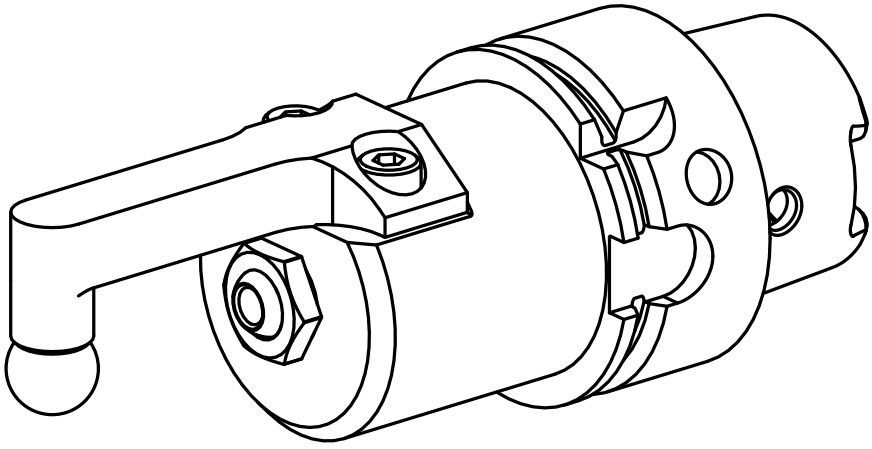

HSK 40

11096656

INDEX

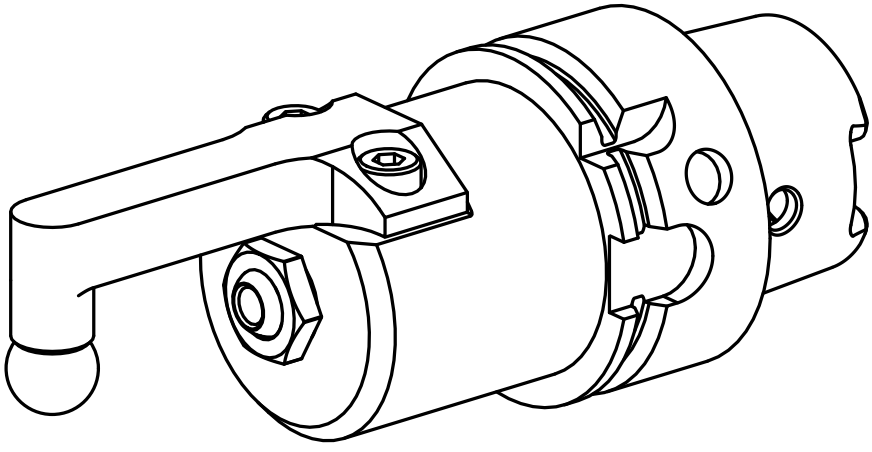

HSK 40