11064030

INDEX

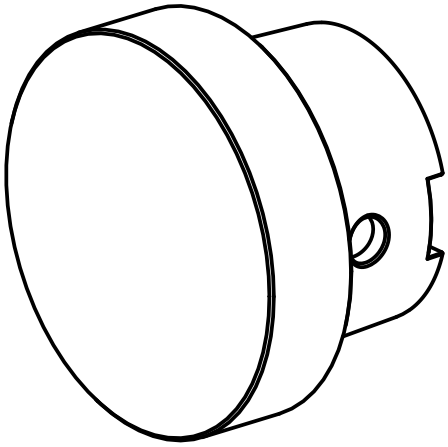

HSK 40

11064030

INDEX

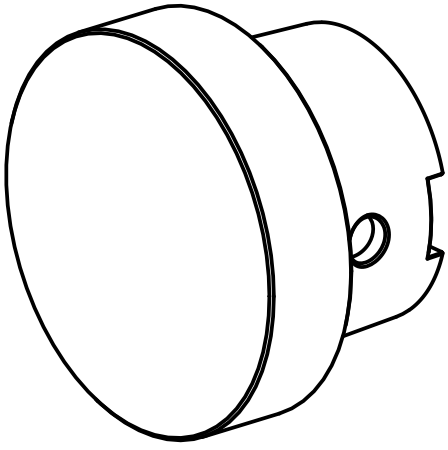

HSK 40