10315651

INDEX

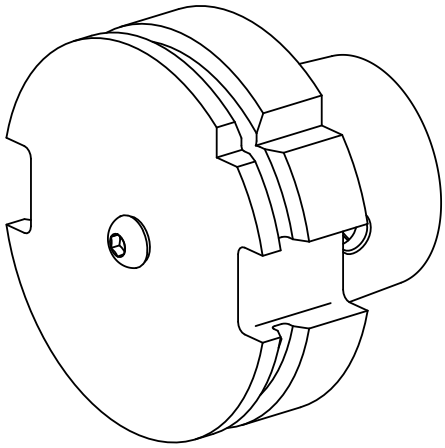

HSK 80

10315651

INDEX

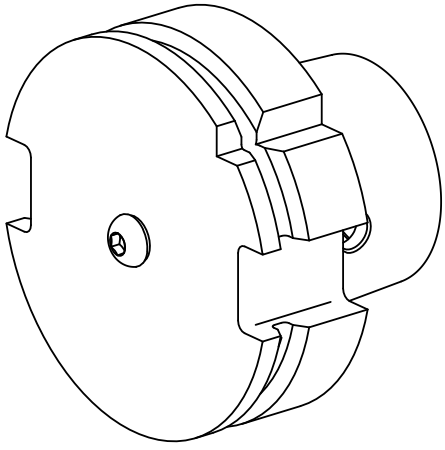

HSK 80