10612788

INDEX

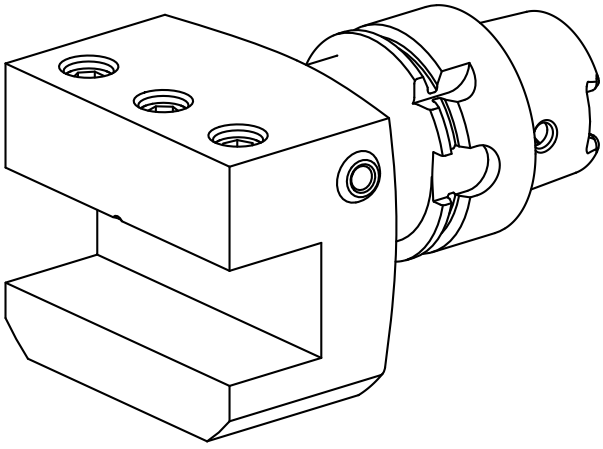

HSK 40

10612788

INDEX

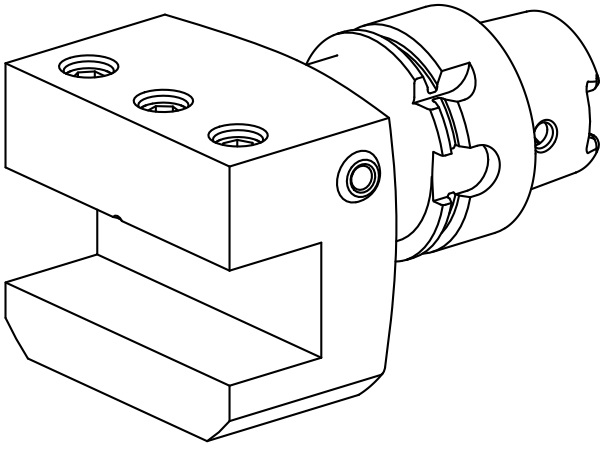

HSK 40