10476772

INDEX

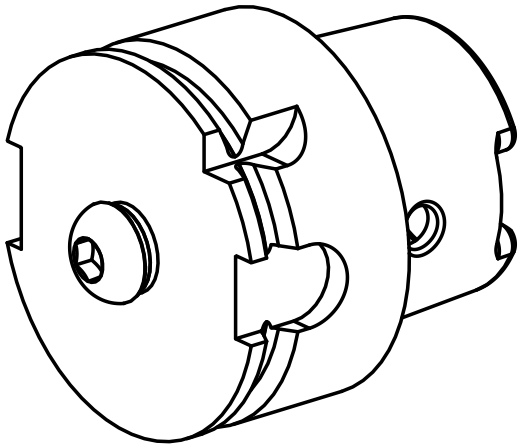

HSK 40

10476772

INDEX

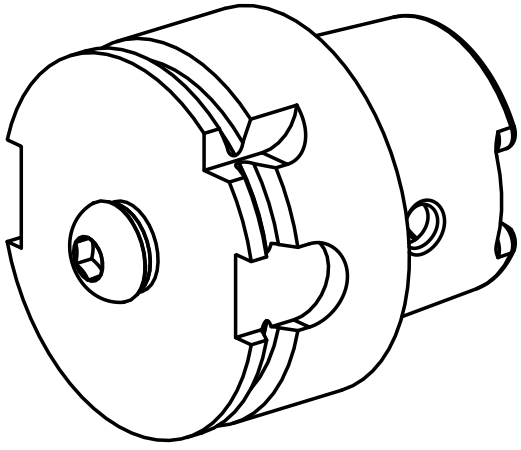

HSK 40