10285532

INDEX

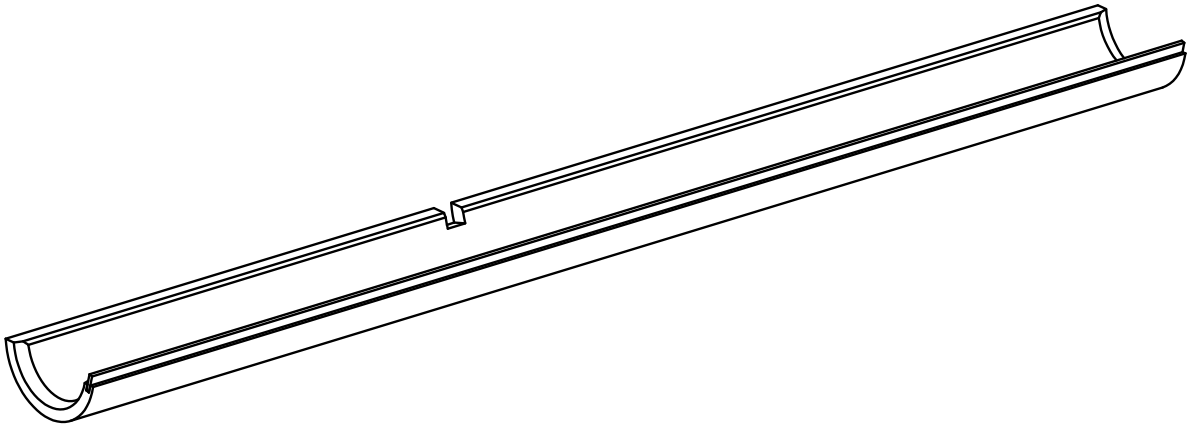

10285532
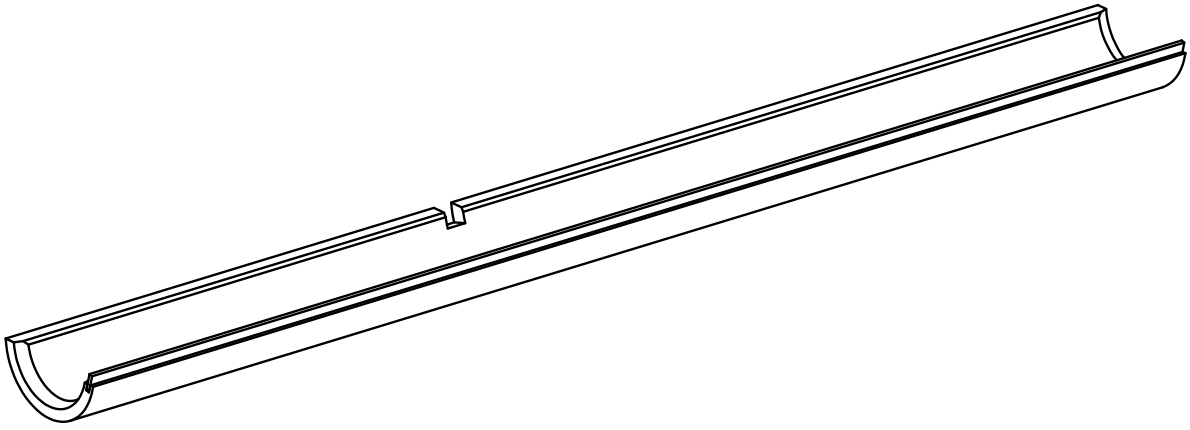
INDEX