10352096

INDEX

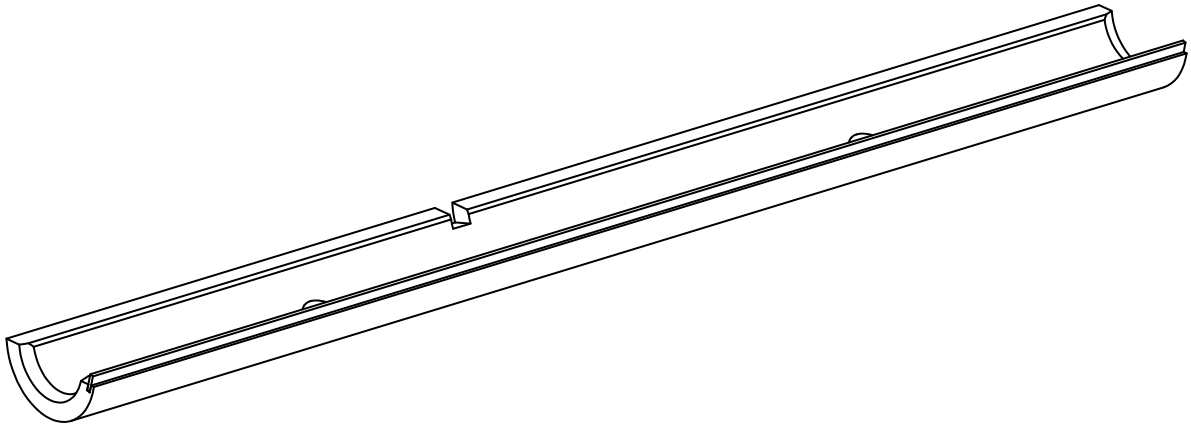

10352096
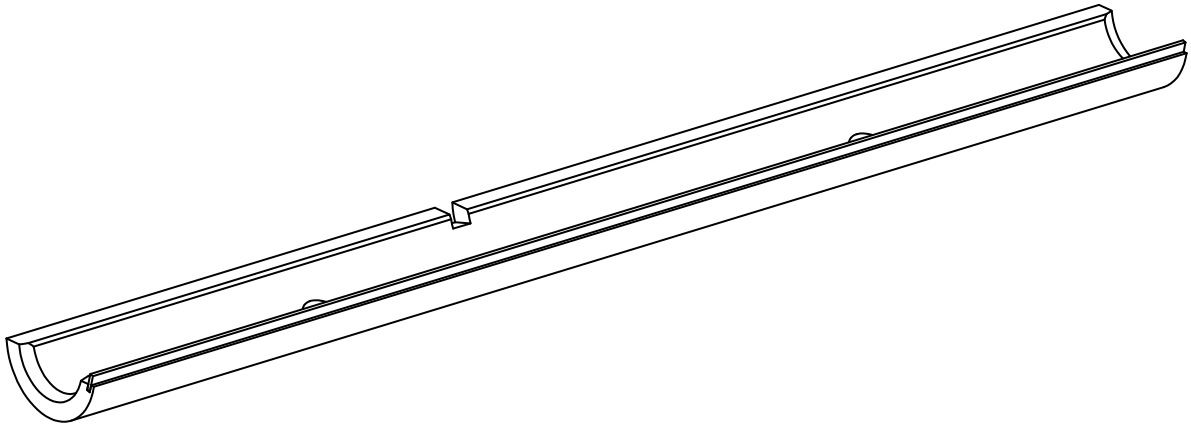
INDEX