10291016

INDEX

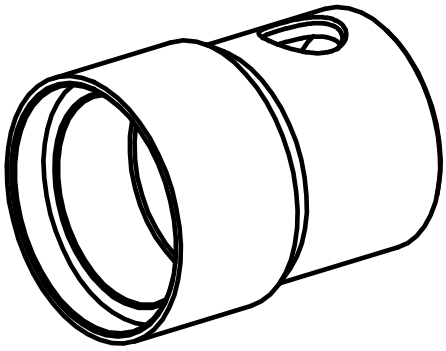

10291016
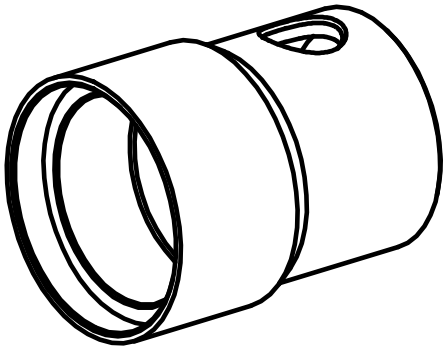
INDEX