10585469

INDEX

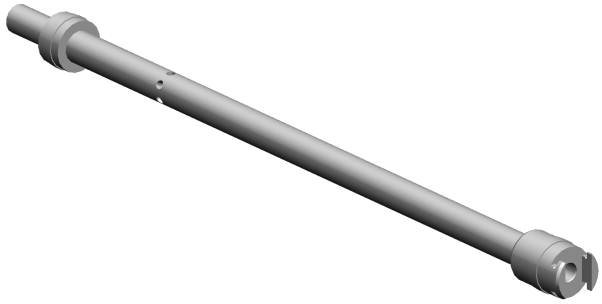

10585469
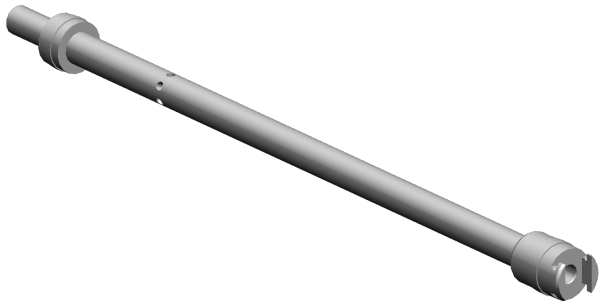
INDEX