10148858

INDEX

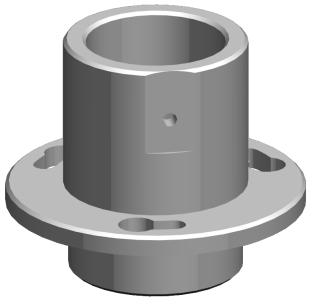

10148858
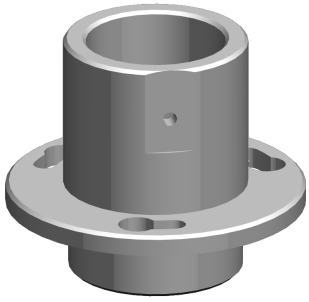
INDEX