10249869

INDEX

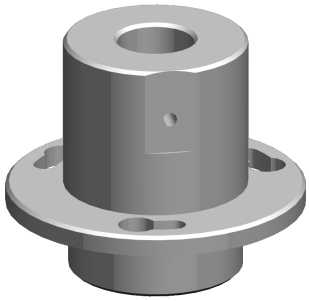

10249869
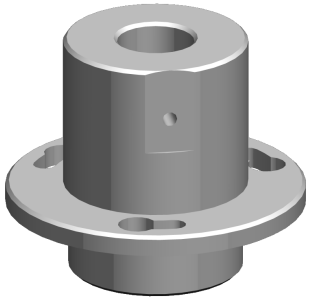
INDEX