10034822

INDEX

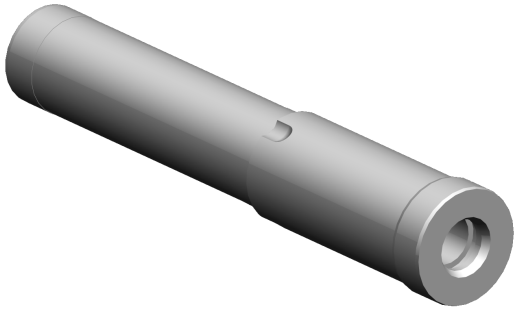

10034822
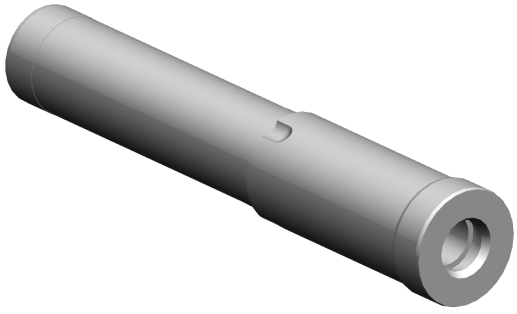
INDEX