12026136

INDEX

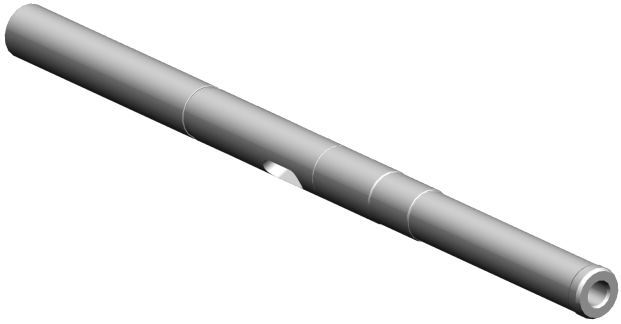

12026136
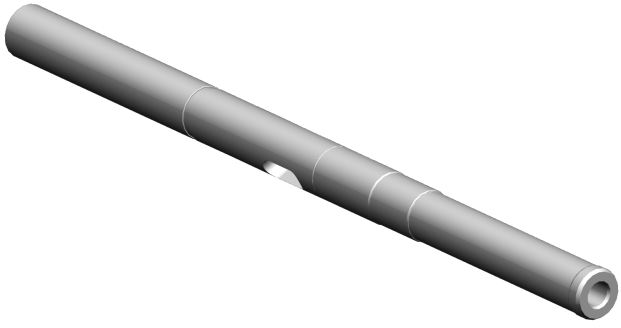
INDEX