11002530

INDEX

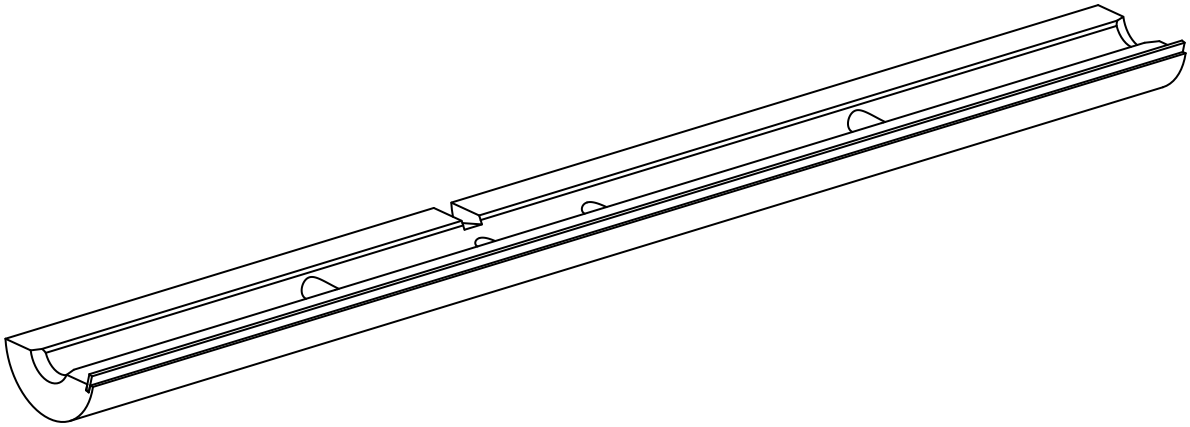

11002530
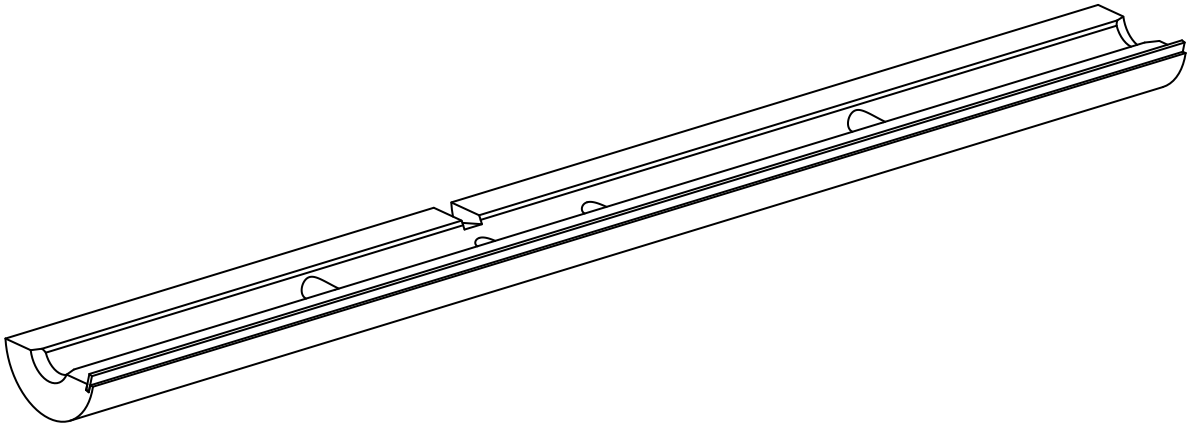
INDEX