10793291

INDEX

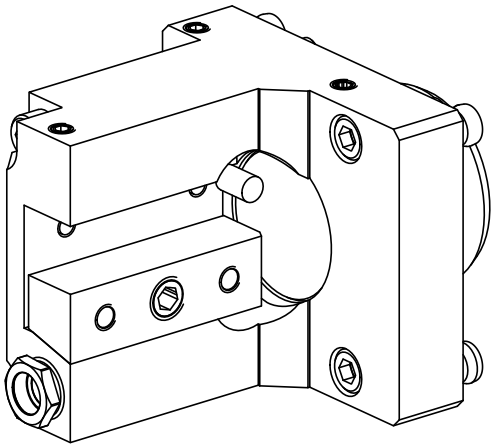

KPS 45

10793291

INDEX

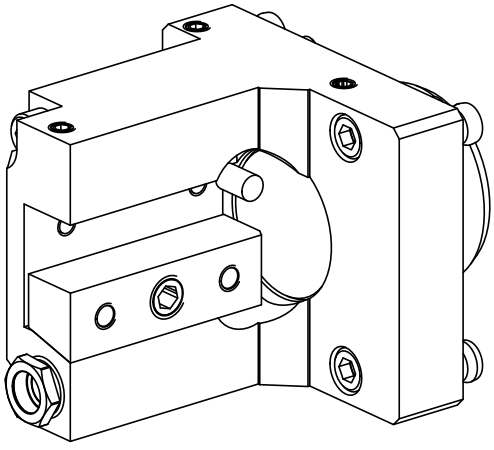

KPS 45