10826026

INDEX

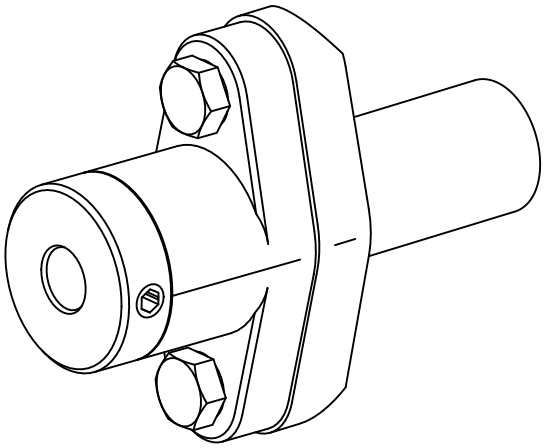

1"

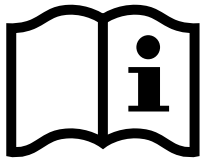

10826026

INDEX

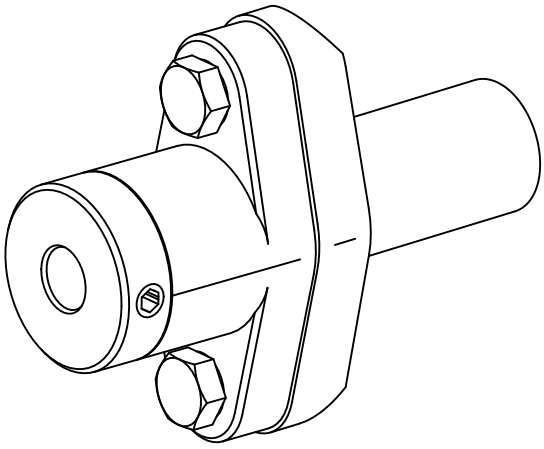
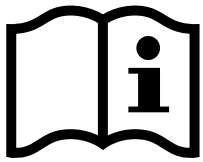
1"