10944270

INDEX

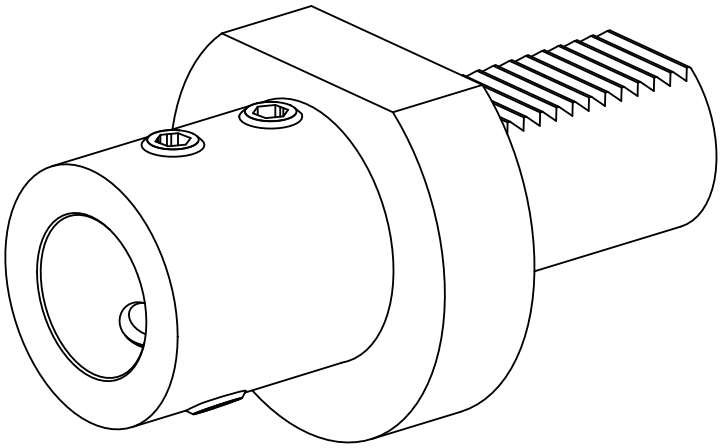

VDI 40

10944270

INDEX

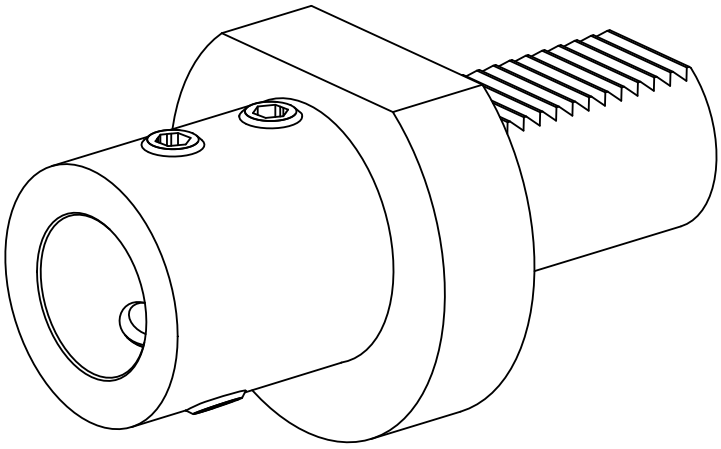

VDI 40