# 10471993

# INDEX

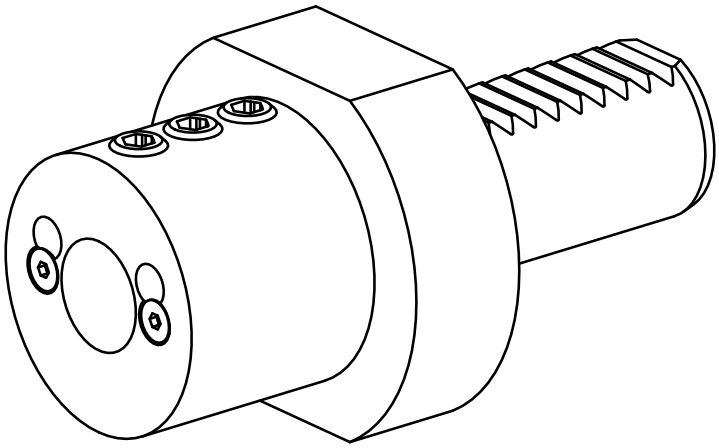

**VDI 25**


# 10471993

# INDEX


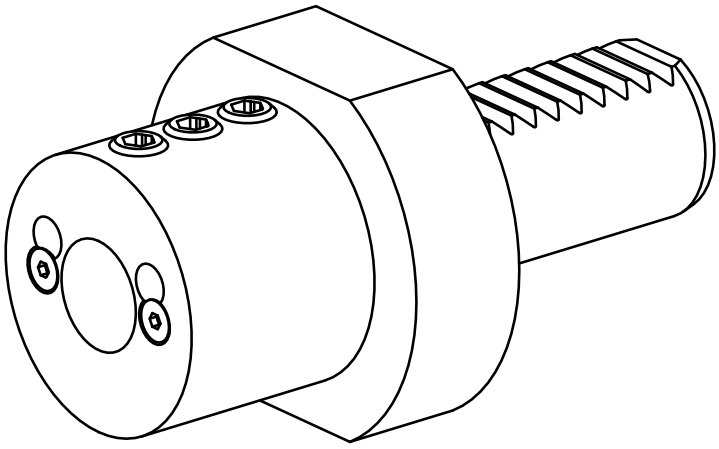


**VDI 25**