10439138

INDEX

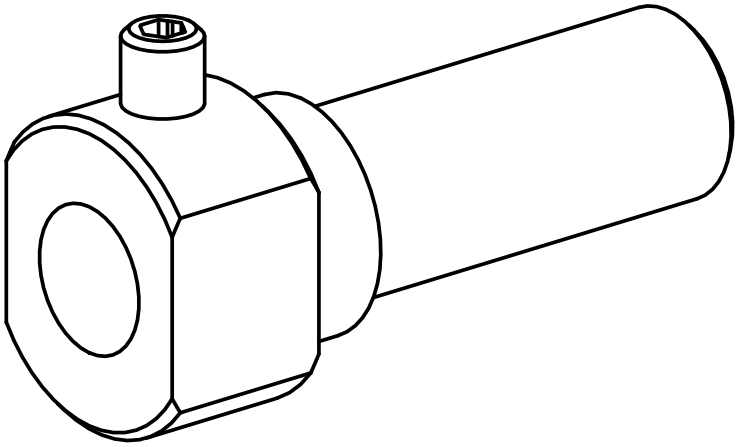

3/4"

10439138

INDEX

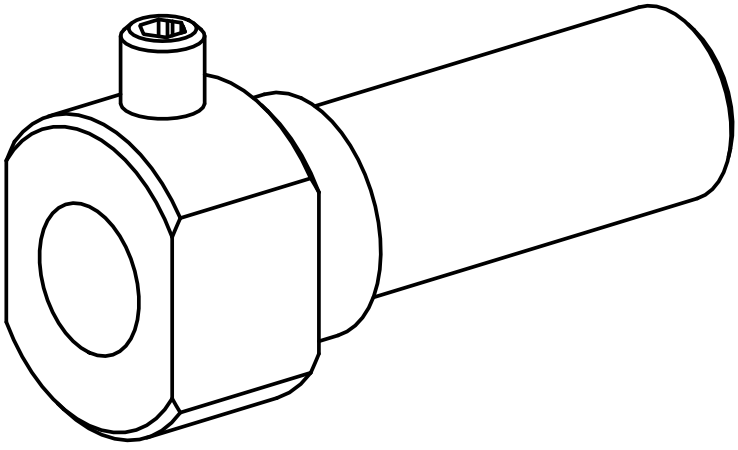

3/4"