12035585

INDEX

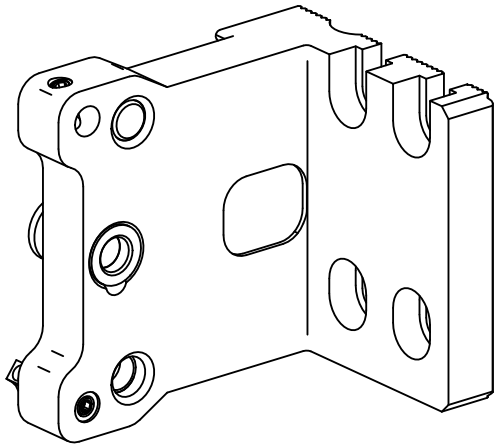

12035585

INDEX

