# 10670405

# INDEX

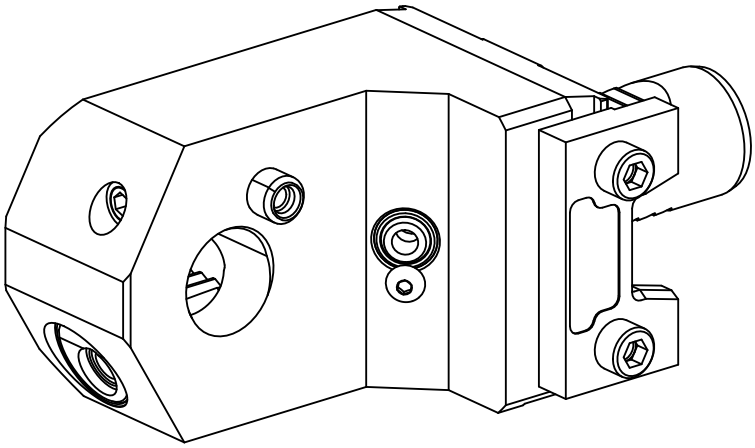

**VDI 25**


# 10670405

# INDEX


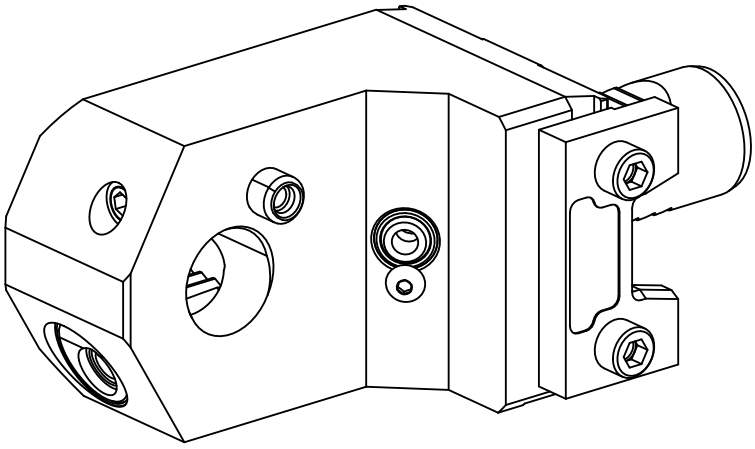


**VDI 25**