10592401

INDEX

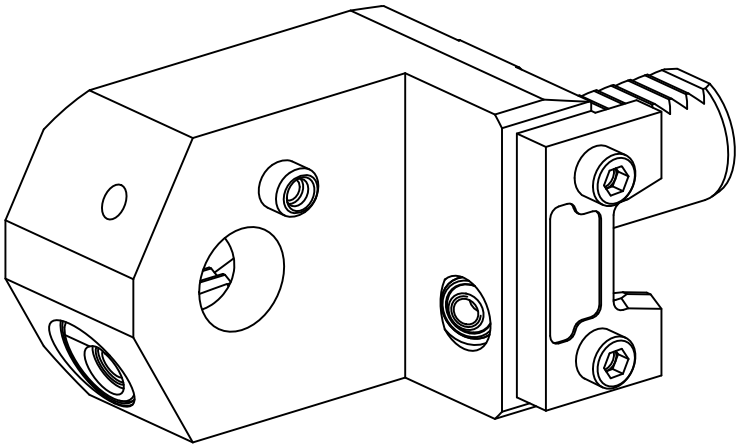

VDI 25

10592401

INDEX

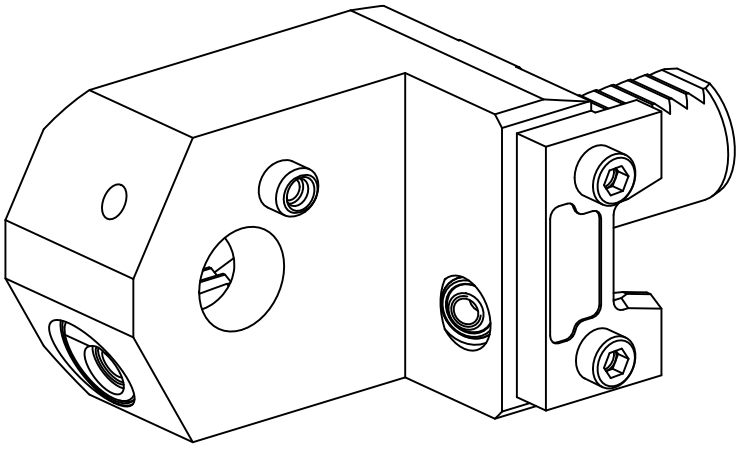

VDI 25