10266840

INDEX

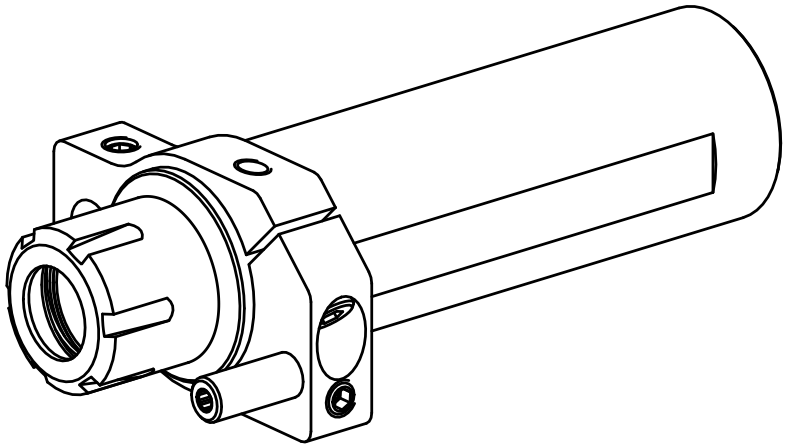

Shank 28

10266840

INDEX

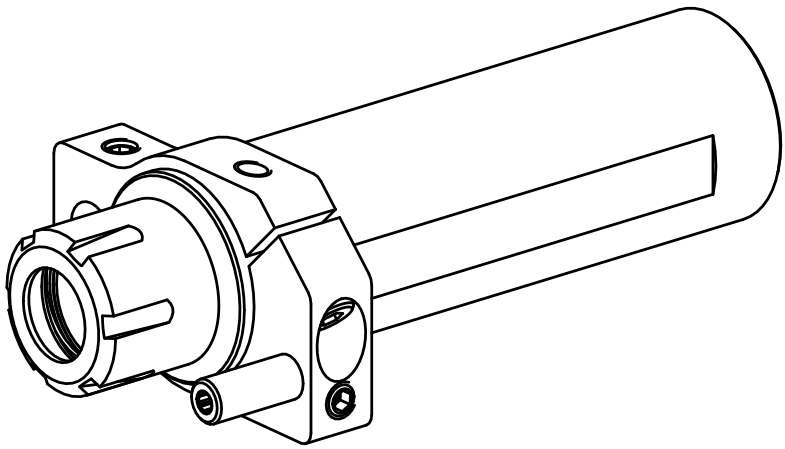

Shank 28