10063273

INDEX

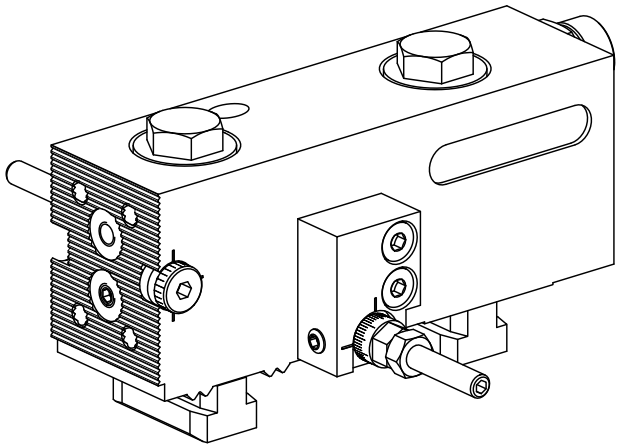

MS16 grooving slide

10063273

INDEX

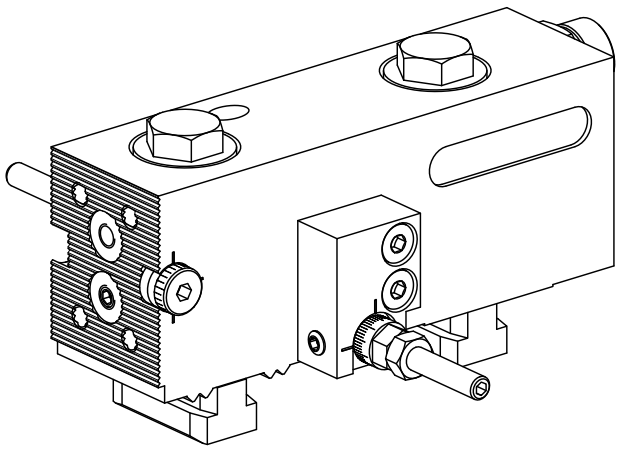

MS16 grooving slide