10336873

INDEX

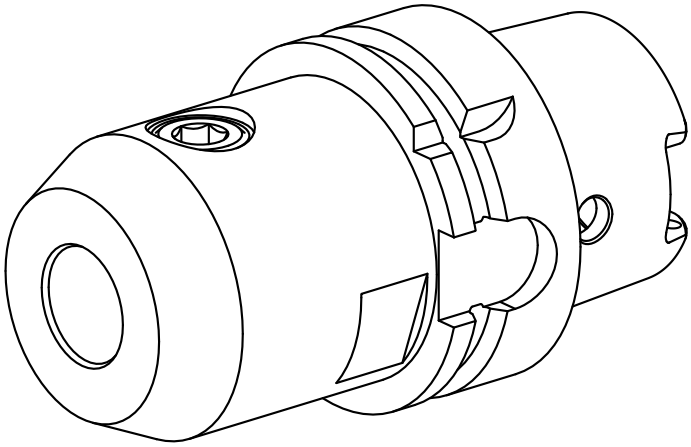

HSK 63

10336873

INDEX

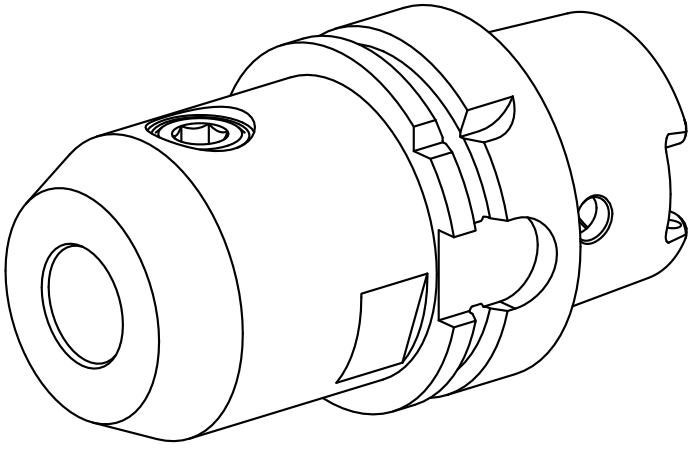

HSK 63