11087974

INDEX

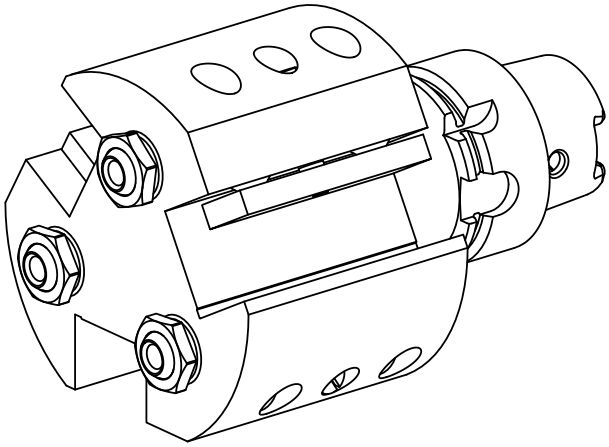

HSK 40

11087974

INDEX

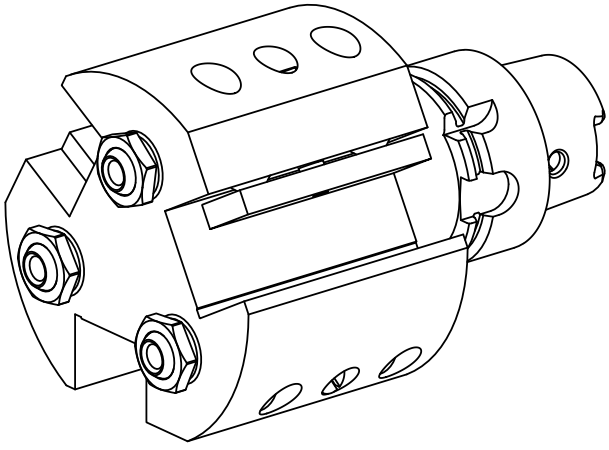

HSK 40