10899654

INDEX

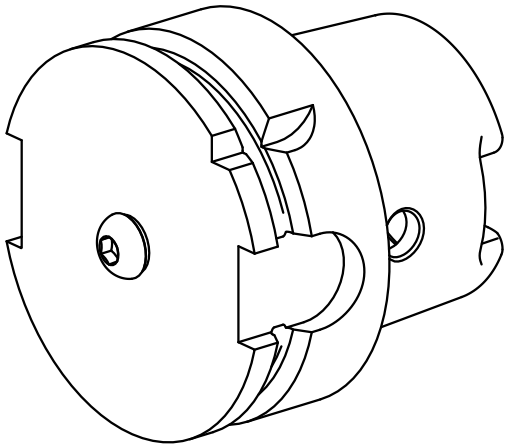

HSK 63

10899654

INDEX

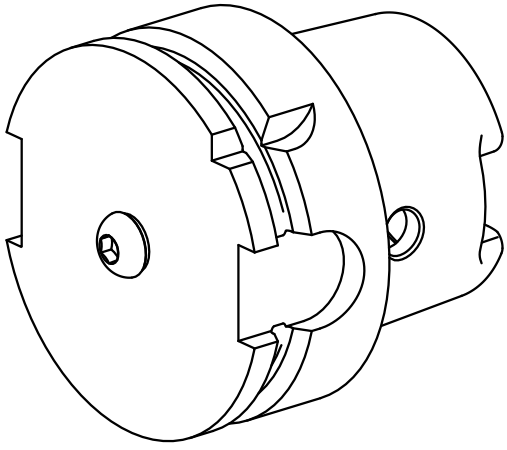

HSK 63