10654591

INDEX

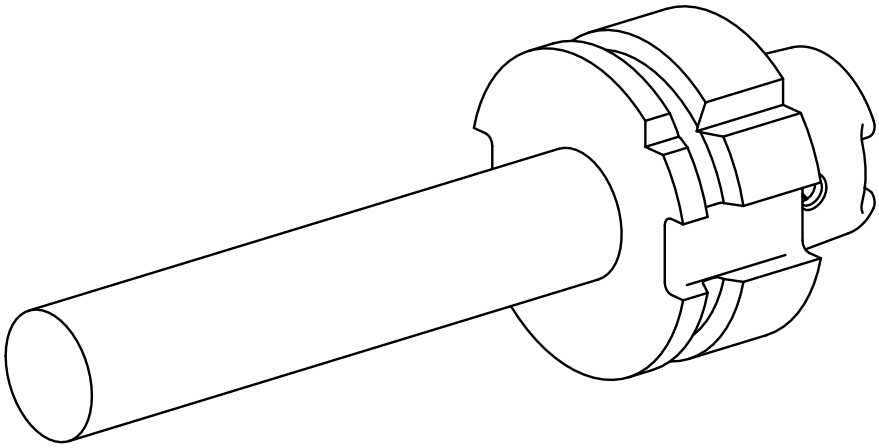

HSK 50

10654591

INDEX

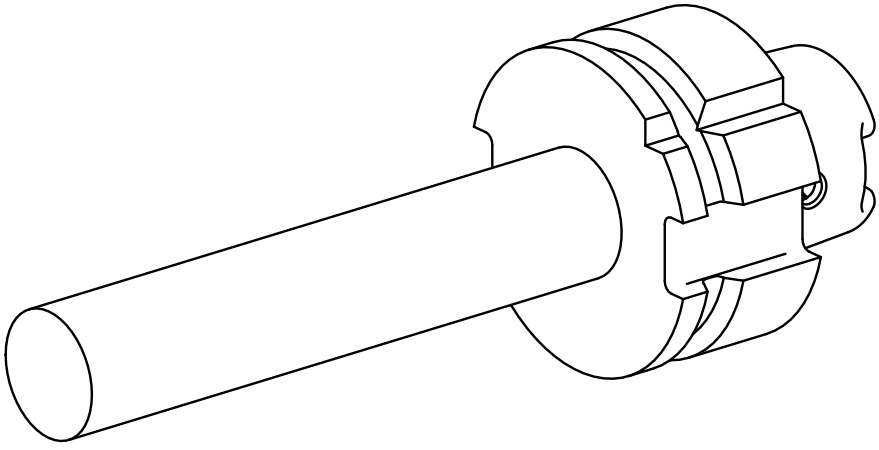

HSK 50