10528865

INDEX

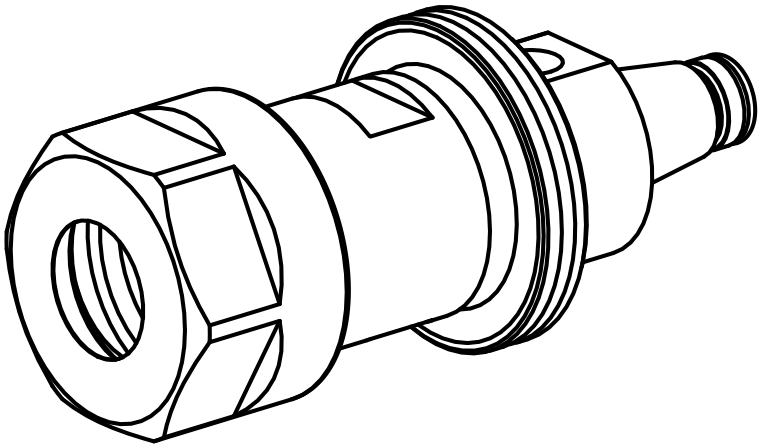

WFB 20-12

10528865

INDEX

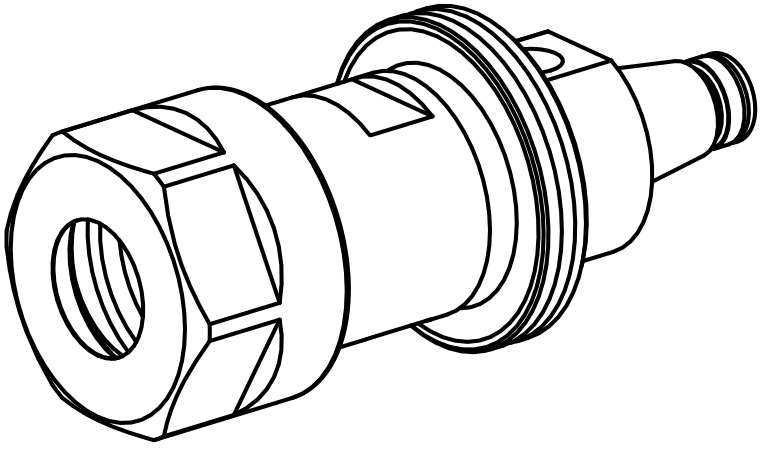

WFB 20-12