10986091

INDEX

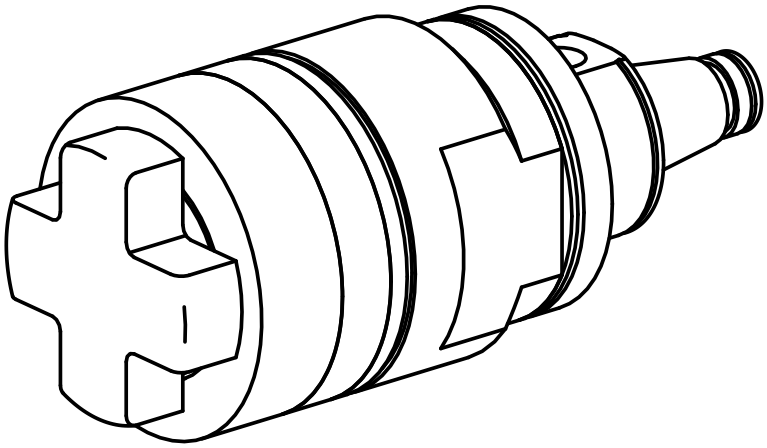

WFB 20-12

10986091

INDEX

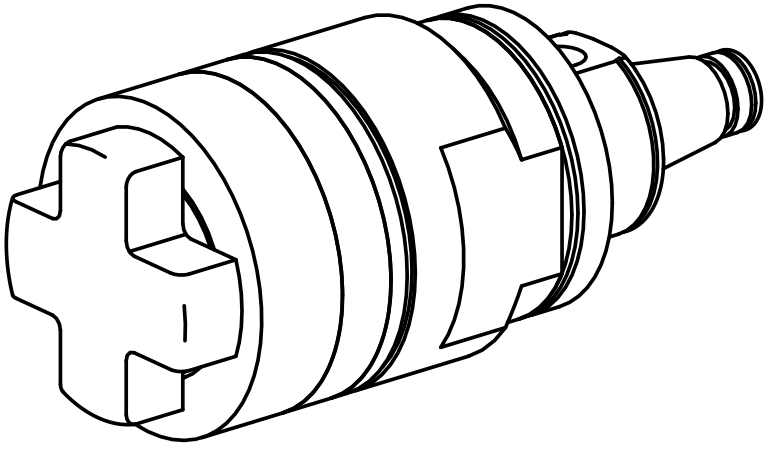

WFB 20-12