10916412

INDEX

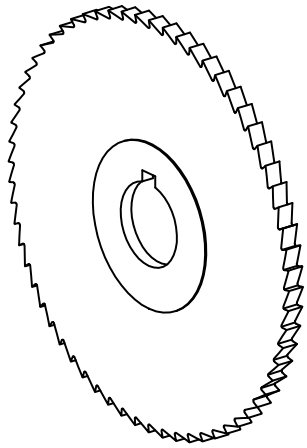

Circular saw blade d80

10916412

INDEX

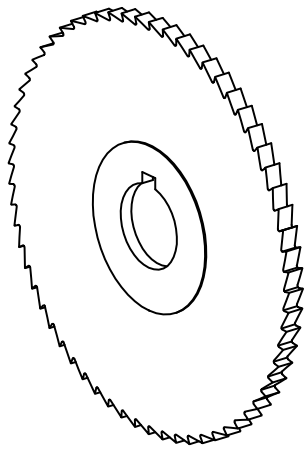

Circular saw blade d80