10998964

INDEX

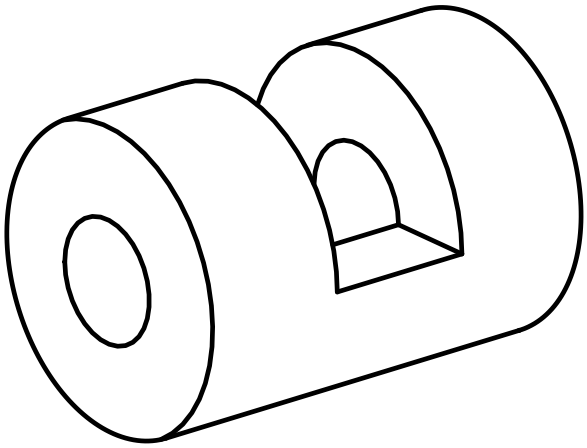

Clamping sleeve

10998964

INDEX

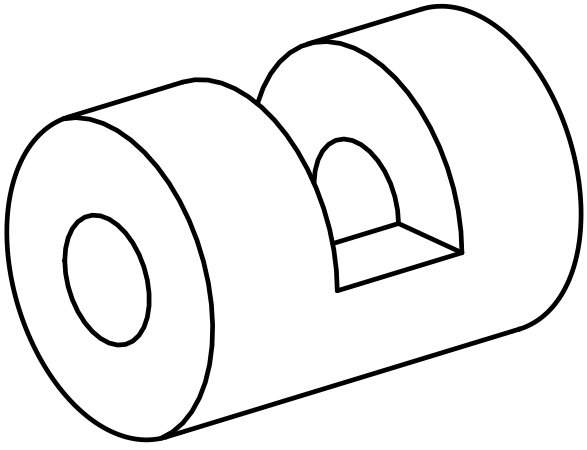

Clamping sleeve