10924992

INDEX

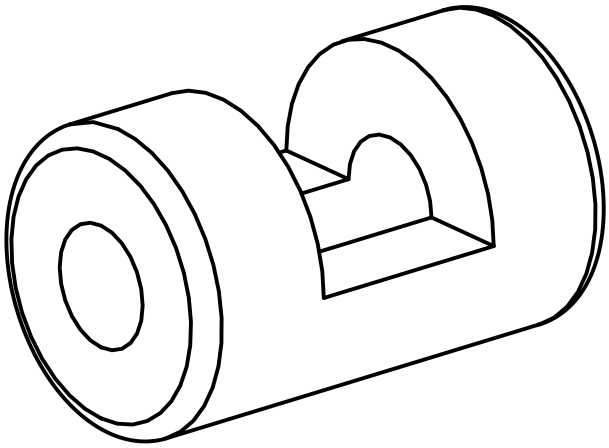

Clamping sleeve

10924992

INDEX

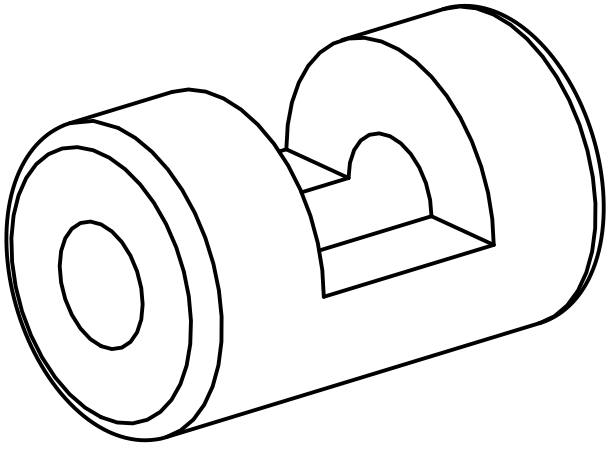

Clamping sleeve