**10838888**

**INDEX**

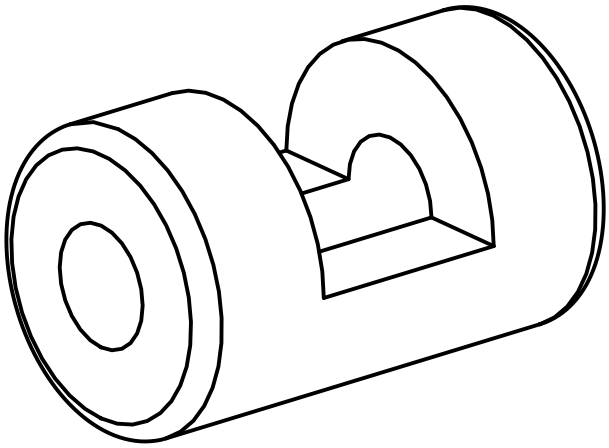

**Clamping sleeve**

**10838888**

**INDEX**

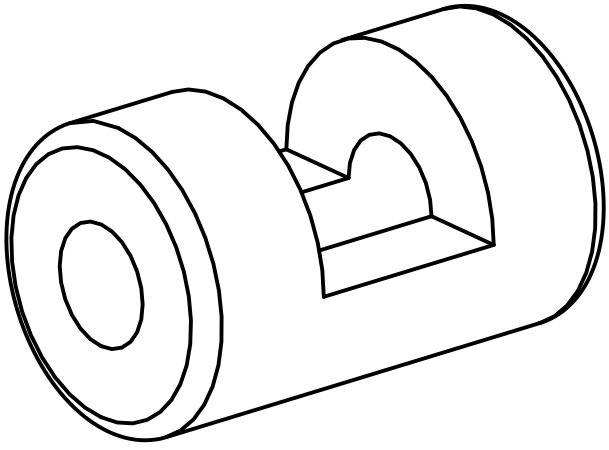

**Clamping sleeve**