10714714

INDEX

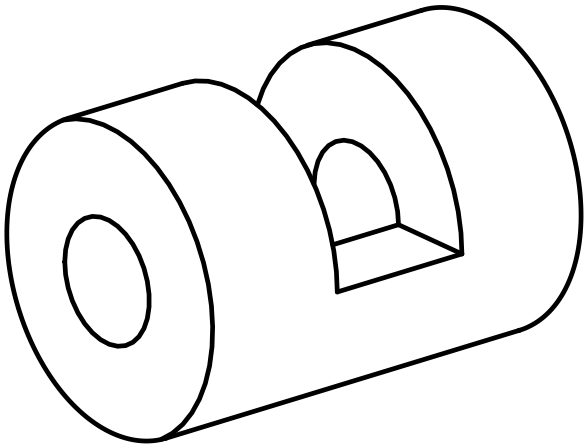

Clamping sleeve

10714714

INDEX

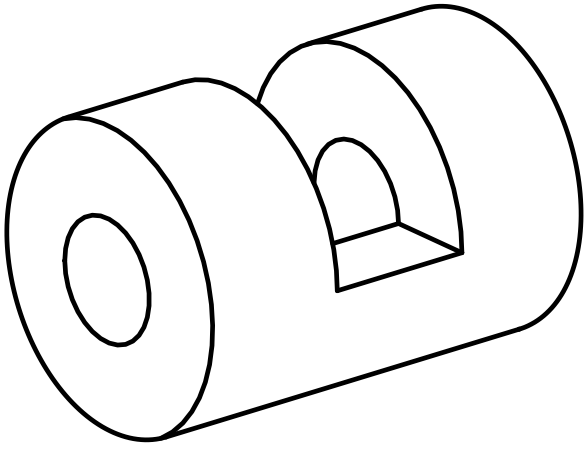

Clamping sleeve