10108672

INDEX

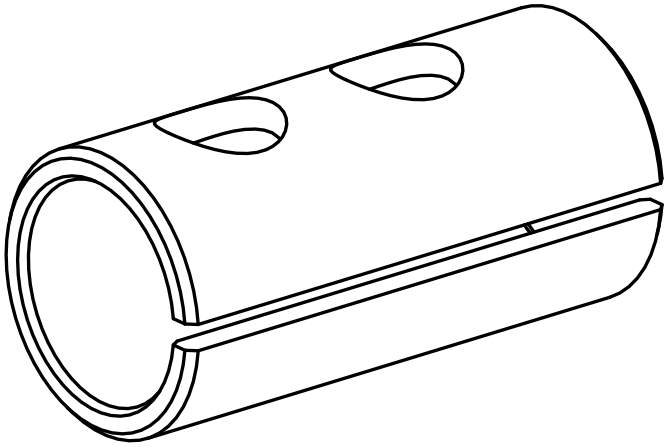

Mounting sleeve

10108672

INDEX

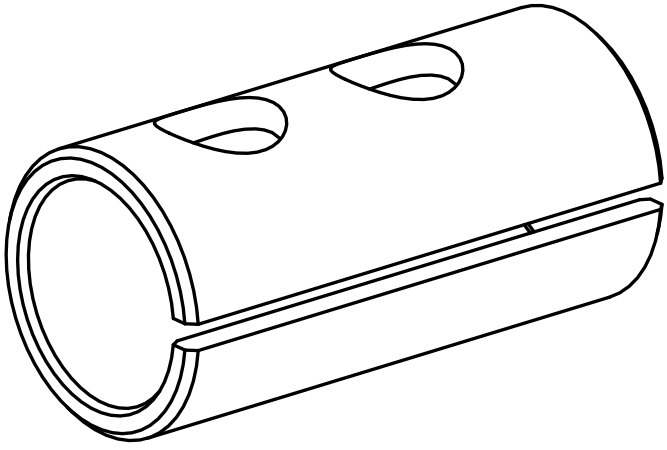

Mounting sleeve