10971699

INDEX

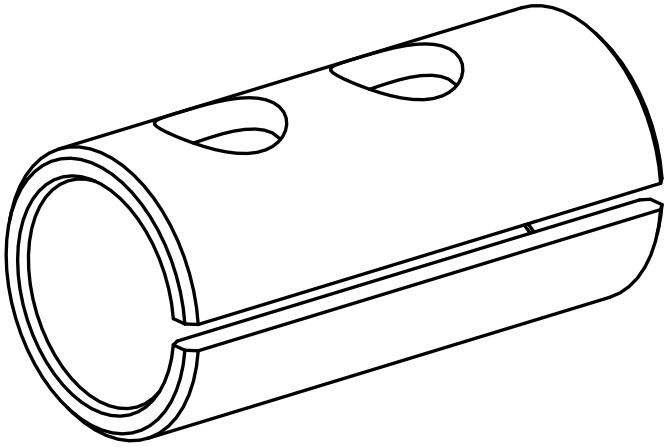

Mounting sleeve

10971699

INDEX

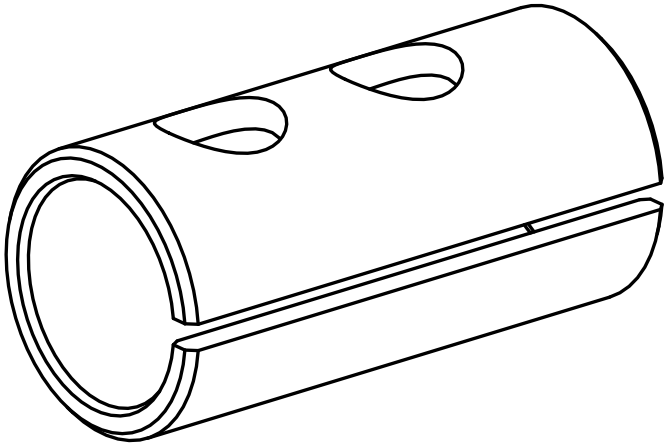

Mounting sleeve