12107988

INDEX

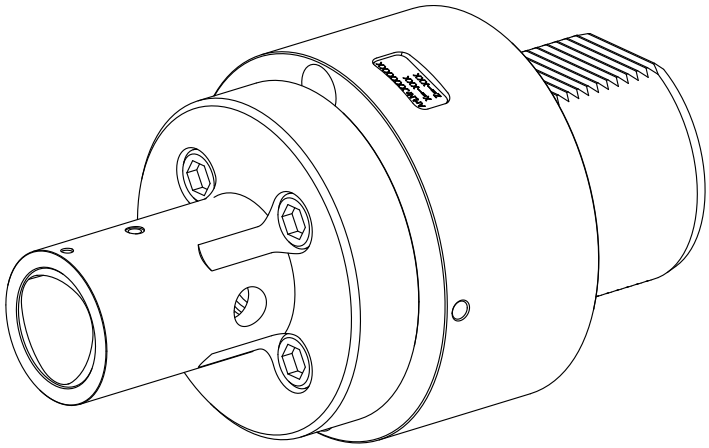

Adapter for presetting units

12107988

INDEX

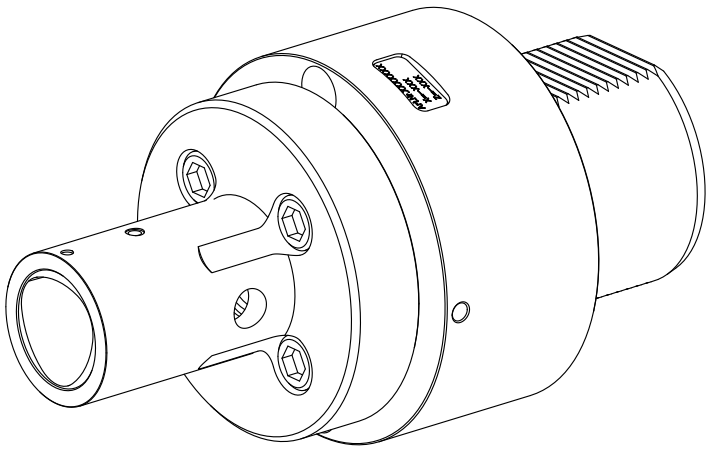

Adapter for presetting units