10373568 **INDEX**

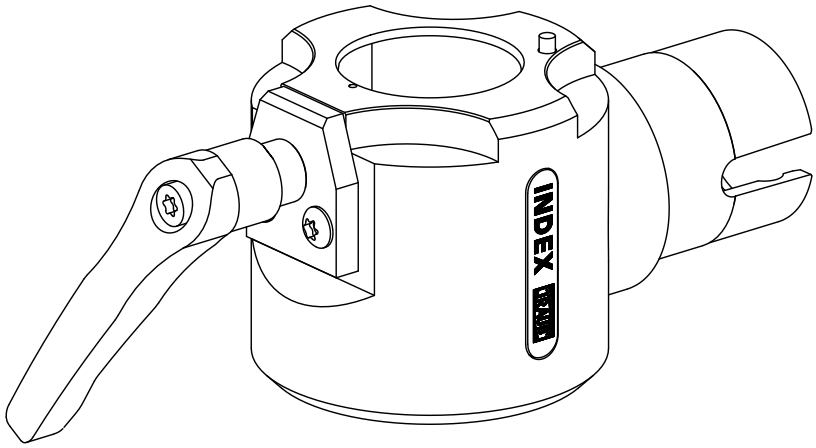

Adapter mounting aid

10373568 **INDEX**

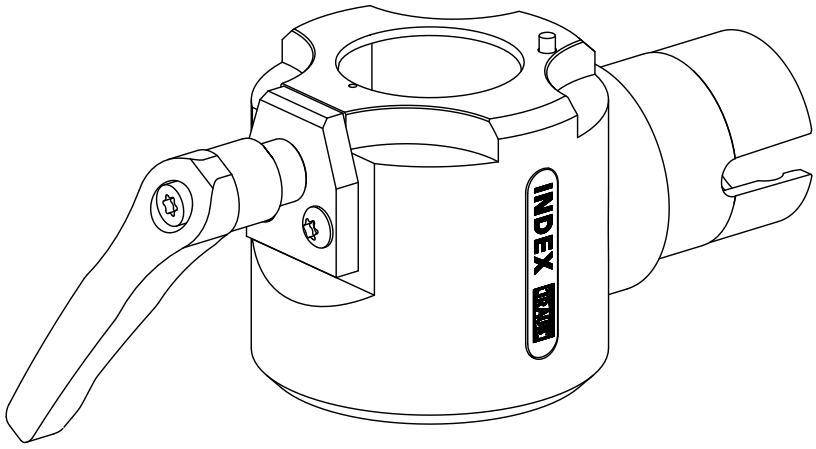

Adapter mounting aid